Residential

Cashpower Power-Rail PLC

Version 10.1 Meter Firmware

Technical Specification

Cashpower Power-Rail PLC is a single-phase keypad-based, split prepayment meter in a DIN rail-mount housing, using PLC communications between the meter and the customer interface unit. Fitted with the shroud, the Power-Rail PLC meter offers features that further enhances the utility's revenue protection capability.

.

Version: 0.0
Date: 15th June 2012
Issued by Product Management: Dave Tarr

Overview

The Cashpower Power-Rail PLC is a single-phase keypad-based, split prepayment meter in a DIN rail-mount housing, using PLC communications between the meter and the customer interface unit. The meter uses the standard PLC customer interface unit which is common to the Cashpower Gemini PLC and Three Phase PLC products.

The meter is typically installed in a pole-top enclosure or secure street kiosk and the small size of the product means a smaller street kiosk can be used. As with the Cashpower Gemini PLC and Three Phase PLC, the meter can be accessed remotely using the Landis+Gyr PLC Remote Access Terminal.

Features

- Compact meter design, with DIN rail-mount layout
- Optional shroud can be fitted for additional cable and terminal protection and tamper detection feature
- Optically senses presence of shroud – if the shroud is removed, meter will enter tamper mode (if the meter is configured for tamper)
- Power Line Carrier communication between meter and the customer interface unit
- Quick and easy to install using existing household wiring. Ideal when additional communication wire is inconvenient.
- Programmable operating mode - Prepayment or Credit metering modes
- Programmable software power limit
- Commissioning and de-commissioning feature
- Significant Reverse Energy (SRE) detection
- Language independent user interface
- SANS 1524-1 compliant
- STS Certified

Split Metering Functionality

The split prepayment meter consists of two parts, the meter and the customer interface unit.

Communication between the meter and the customer interface unit is by means of Power Line Carrier (PLC) communication using existing household wiring; no additional communication wires are required.

The customer interface unit is compact with a user-friendly keypad and display. It may be installed in any convenient location in the consumer's home where there is an electrical socket outlet.

The prepayment meter contains all critical metering, number decryption and load control functionality. It operates independently and is immune to any form of tampering on the customer interface unit.

The meter is usually installed in a secure, locked enclosure, typically a pole-top enclosure. It is outside the consumer's home to facilitate easy inspection by the utility at any time and to reduce the opportunity of fraud by tampering.

Benefits

A key feature of the Cashpower Power-Rail PLC split prepayment meter is the ability to use standard household wiring for communication between the customer interface unit and the prepayment meter. This capability enhances retrofitting or replacement of conventional meters with prepayment meters.

The benefits include lower cost of installation as no new cabling needs to be laid, and speed of installation.

The keypad or customer interface unit is simply plugged into any existing mains outlet and after a simple commissioning procedure, the unit communicates with the remote meter up to a distance of typically 200 metres.

The maximum communication distance is dependent upon network attenuation and interference.

Customer Interface

The customer interface is connected by a power cord to an existing mains outlet in the household. Under normal conditions when there is sufficient credit in the meter, the customer interface unit operates directly from mains voltage. However in the event that the meter credit expires and the meter disconnects power to the house, the customer interface unit is fitted with an alkaline battery to allow the customer to re-enter a new credit token.

The customer or field technician can access meter parameters by entering specific register information using the keypad.

In addition, the customer interface unit has audible low credit warning tones that can be silenced with a key press.

Meter Status and Diagnostic Indicator

The meter includes a LED status indicator. This allows a technician to view the operational status of the meter without the need for specialised interrogation tools or having to gain access to the consumer's premises. Information such as power

limiting, commissioned status and credit status are available.

Optical Interface

As a standard feature, the Power-Rail PLC meter offers an IEC 62056-21 compliant optical communications port. This allows the utility to access a variety of information stored inside the meter.

Anti-tamper Features

The split configuration of the Power-Rail PLC meter significantly reduces the risk of tampering, especially considering the meter is installed in a remote, secure location. The meter is mechanically sealed against tampering through the use of mechanical clips and inaccessible assembly screws.

A shroud can also be fitted to the meter, which not only protects and limits access to the meter terminals and cables, but also offers an innovative tamper detection facility. Using the optical interface of the meter, the removal of the anti-tamper shroud can be detected by the meter, resulting in the meter entering a tamper condition and opening the load switch. The tamper condition can only be reset by an authorised, meter specific STS token.

Utility-sealed wire seals can be field-fitted to secure the shroud to the meter. The use of these mechanical seals ensures that there will be visible signs of tampering if unauthorised entry to the meter is attempted.

The meter also has a feature allowing detection of Significant Reverse Energy. If the line and load wires are swapped during installation, the meter will continue to operate and decrement credit but can be factory programmed to tamper and disconnect the load should Significant Reverse Energy be detected.

Disconnect on Power Fail

The Power-Rail PLC has a unique feature to cater for the condition where the neutral wire to the meter is removed. The meter will disconnect the load if a power failure is detected, as would be the case when neutral is removed.

Remote Access

The meter is capable of “upstream” communication to a concentrator at a kiosk, low-voltage distribution transformer or mini sub-station.

This feature enables the Power-Rail PLC meter to be remotely accessed by the utility to check the remaining kilowatt-hours, total kilowatt-hours used to date, maximum power limit and other useful parameters stored by the prepayment meter.

Communications capability can be implemented by using the Landis+Gyr PLC Remote Access Terminal which can be fitted into a secure enclosure or substation to provide connectivity via wireless technology to a power utility’s back office.

By means of the concentrator, bi-directional communication is possible. A message can be sent to an individual meter to request information, and prepayment tokens (generated for maintenance purposes) can be sent to the meter.

Prepayment and Credit Mode

Using supplier-specific 20-digit STS prepayment tokens which are unique to each meter, the Cashpower Power-Rail PLC prepayment meter can be converted into a standard credit meter while retaining some of the useful features of a prepayment meter.

These include the maximum power limit and remote customer interface unit for customer convenience.

The meter can be switched between credit mode and prepayment mode when necessary, using a 20-digit STS prepayment token generated by Landis+Gyr’s Suprima prepayment system.

Surge Protection

The Power-Rail PLC meter may be supplied with a surge arrestor that is capable of sustaining up to 30kA during transients.

Cashpower Power-Rail PLC Technical specifications

General information

Meter Format
Single phase, 2-wire, direct connected prepayment meter

Compatible network(s)
Single phase, 2-wire, earthed neutral

Operation

General
Credit store with decrement-on-usage

Credit entry mechanism
Keypad; encrypted numbers

Encryption algorithms
STS Compliant[1]

Applicable STS specifications
IEC62055-41 and IEC62055-51

Electrical Ratings

Nominal Voltage (U_n) - Rated Voltage
230 Volts AC rms (other variants available)

Nominal frequency
50Hz

Operating voltage range
80% to 120% of U_n (184V – 276V)

Maximum continuous current (I_{max})
80 Amps (factory and field programmable to lower power limits)

Burden

Voltage circuit	<1.4W / <9VA @ 230V, 50Hz
Current circuit	<2.5 VA @ Base Reference Current (I_b)

Protective class (according to IEC 62052-11)
Class II (double insulated)

[1] STS = Standard Transfer Specification (Industry Standard for prepayment)

Metrological Performance

Measurement direction
Forward and reverse power detection and metering[2] (credit is decremented in both directions)

Meter constant (LED flash rate)
1000 impulses / kWh

Basic reference current (I_b)
10A

Accurate metering range
0.05 I_b to I_{max} [3]

Starting current
≤ 0.004 I_b for Class 1

Power threshold
6.5W for base 10A (approx 28mA @ 230V and cos(Φ) = 1)[4]

Accuracy class index
Class 1

Maximum error – Class 1
< ± 1% over range 0.1 I_b to I_{max}; (with 0.5 ≤ cos(Φ) ≤ 1.0 lagging and 0.8 ≤ cos(Φ) ≤ 1.0 leading)[5]

Disconnection Device

Type
Single Pole latching contactor 100A

Insulation, Overvoltage and Surge Protection

Insulation System Classification
Protective Class II (according to IEC 62052-11)

[2] Accurately meters energy if line and load connections are reversed. Meter can also be configured to tamper on reverse energy detection (SRE).
[3] The metering is accurate within the limits specified by IEC62053-21. Should a meter momentarily be operated outside its specified maximum current rating, it will meter accurately up to 2 x I_{max} (80A meters).
[4] The power threshold represents the minimum load power that the meter will register. This value is programmable, with the recommended level for a base 10A meter shown.
[5] IEC 62053-21: 0.8 ≤ cos(Φ) ≤ 1.0 Leading, 0.5 ≤ cos(Φ) ≤ 1.0 Lagging

Insulation Level
4kV rms for 1 minute

Overvoltage withstand
440VAC for 48 hours[6]
600VDC for 1 minute[7]

Surge Immunity – Voltage impulse withstand
Differential
Meets the requirements of IEC 62052-11

Surge Immunity – Current impulse withstand
Service rating
5 kA 8/20µs (with surge arrestor fitted)[8]

Withstand rating
30 kA, 4/10µs (with surge arrestor fitted)

Specification compliance
SANS 1524-1, IEC 62052-11
SANS 61643-1 (Class III Surge Arrestor)

Electromagnetic compatibility (EMC)
Electrostatic discharge 15 kV air discharge

Immunity to RF fields
80 MHz to 2 GHz @ 10V/m with load, 80 MHz to 2 GHz @ 30V/m no load

Immunity to fast transient bursts 4 kV

Radio interference
Complies with requirements for CISPR 22

Specification compliance
IEC 61000-4-2; IEC 61000-4-3;
IEC 61000-4-4; IEC 61000-4-6, CISPR 22

Communication Circuitry

Type
Power line carrier

Carrier Frequency
66kHz (FSK)

Protocol
Device Language Message Specification (DLMS).
High-level data link control (HDLC)

Specification Compliance
IEC61334-4-41, ISO/IEC13239 and EN 50065

Communication Range
Typically > 200 m (network dependant)

Main Enclosure

Type
Rail mount, with locking clip compatible with 35mm DIN standard rail

Rating
Product is designed to be installed in a pole-top or street kiosk housing rated at IP51 or better

Material
Polycarbonate, flame-retardant, glass-filled grade

Resistance to heat and fire
Complies with 960°C glow-wire (IEC 60695-2-1)

Resistance to spread of fire
UL94-V0 rated @1.5mm. No toxic gases emitted: 'Green Material'

Dimensions
127mm(H) x 47.7mm(W) x 87.5mm(D)[9]

Mass
Approximately 310 g

Terminals

Layout
Top Live-in, Neutral-in cage terminals

Bottom Live-out cage terminal

Live Terminals
Type Single screw (M8), moving-cage terminal

Material Mild steel, yellow passivated

Maximum Cable Size $25mm^2$

Neutral Terminal
Type Single screw (M6), moving-cage terminal

Material Mild steel, yellow passivated

Maximum Cable Size $16mm^2$

[6] This higher specification (440V as opposed to 400V) has not yet formed part of the official specification
[7] This higher end test is not a requirement of IEC 62052
[8] Surge arrestor externally fitted between Live In and Neutral

[9] (Excludes shroud), please see diagram

Sealing

Type

Meter enclosure: Factory sealed with additional utility sealing point for electronic enclosure

Shroud: Utility sealing wires (2 points)

Operating Environment

Area of application

Indoor meter (according to IEC62052-11)

Operating temperature range

-10°C (+14°F) to +55°C (+131°F)

Storage temperature range

-25°C (-13°F) to +70°C (+158°F)

Relative humidity

Maximum ≤ 95%; Annual mean 75%

Man-Machine Interface

Rate of consumption indicator

Visible Red LED, 1000 pulses/kWh

Status Indication

Visible Yellow LED

External Interfaces

Standard Interrogation Port

8-pin interface according to ESKOM DISSCAAA9

Eskom Interrogation Port

According to Eskom DSP34-1635 specification

Optical Communications Port

According to IEC 62056-21

Proprietary Interrogation Port

Data interface for Landis+Gyr equipment

Specifications Compliance & Approvals

SABS

SANS 1524-1

Eskom

Eskom DSP34-1635

STS

IEC62055-41 and IEC62055-51

Cashpower Power-Rail PLC Customer Interface Unit

Electrical Ratings

Supply Voltage

220-240 VAC

Supply Frequency

50Hz

Burden

<0.82 W / < 17 VA @ 230VAC, 50Hz

Maximum Rated Current

0.09A @ 230VAC, 50Hz

Protective Class

Double insulated – Protective Class 2

Supply Connection

Integrated power cord. Variants are available with an International 2 pin plug or a 15A, 3 pin South African plug[10]

Batteries

1 x 9 Volt (6LR61 type) battery (typical battery life is 2 years)

Communications Circuitry

Type

Power Line Carrier (PLC)

Carrier Frequency

66kHz FSK – CENELEC A Band for utilities

[10] Other variants may be available – consult Landis+Gyr

Protocol
Device Language Message Specification (DLMS). High-level data link control (HDLC)

Specification compliance
IEC 61334-4-41, IEC 61334-5-2, and EN 50065-1

Operating Environment

Operating Temperature Range
-10°C to +55°C (+14°F to +131°F)

Storage Temperature Range
-25°C to +70°C (+12°F to+158°F)

Relative Humidity (IEC 62052-11)
Maximum ≤ 95%; Annual mean <75%

Enclosure Design

Type
Wall mounted with integrated AC power cord and sliding battery compartment

Degree of Protection (IP Rating)
IP 51

Material
UV Stable Polycarbonate/ABS blend with flame-retardant

Resistance to heat and fire
Complies with 960°C[11] glow-wire (IEC 60695-2-1)

Resistance to spread of fire
UL94-V0 rated @1.5mm.
No toxic gases emitted: 'Green Material'[12]

Dimensions
144mm(H) x 120mm(W) x 40.8mm(D)

Weight
Approximately 350 g (including battery, power cord and power plug)

Sealing & Access Control

Battery Compartment
Sliding battery compartment for battery replacement

Electronics Compartment
Factory sealed with screw sealing plug- no user serviceable parts

Man-Machine Interface

Type
Language-independent

Components
Pictographic/Numeric LCD display, keypad, LED rate of consumption indicator, audio feedback

Liquid Crystal Display (LCD)
Size 9cm^2 (45mm (W) x 20mm (H)), 8 digits + 11 icons
Digit height: 9.3mm

Icon information
Happy face, Sad face, Alert, Load switch status, Info, kWh, 4-segment credit wedge

Numeric information
Display of various meter information such as credit levels, number entry, etc.

Compliance / Certification
SANS / IEC60950

Keypad
12-key, international standard layout including "Information" and "Backspace" keys

Buzzer
Audio feedback on key press, encrypted number accept and reject melodies and low-credit alarm

Rate of Consumption Indicator (Rate LED)
Rate of consumption indicator (Pulse rate proportional to current rate of consumption). Note that this is not a reference output for accuracy verification

Alarm Indicator
Visible warning of critically low credit status

Diagnostic Information
Additional meter parameters accessible via the "Information" key

[11] Only 650°C called for by standard industry specification
[12] No V-rating or 'Green' material called for by industry specifications

Cashpower Power-Rail PLC Dimensions

Meter Dimensions

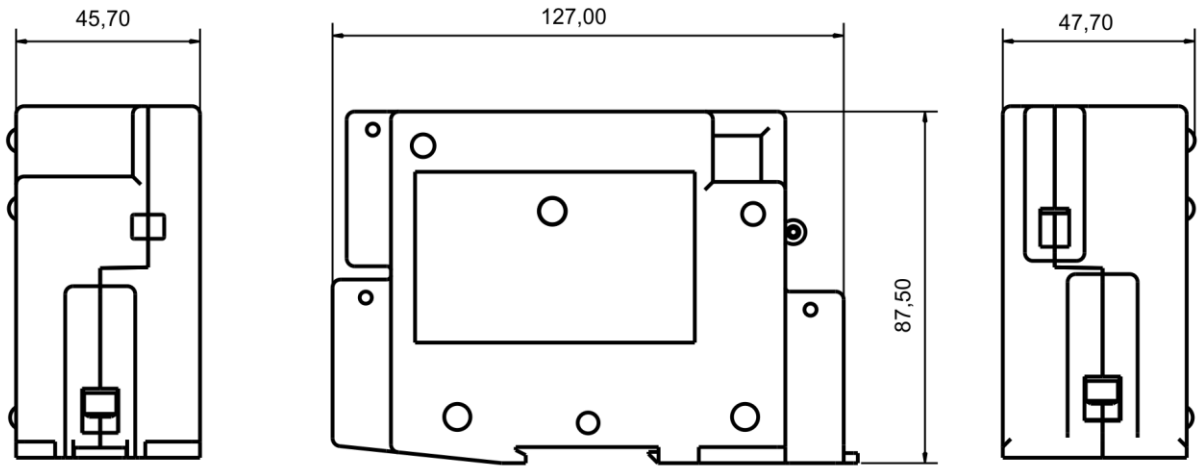

Figure 1:(Above) Dimensions of the Power-Rail meter without the shroud

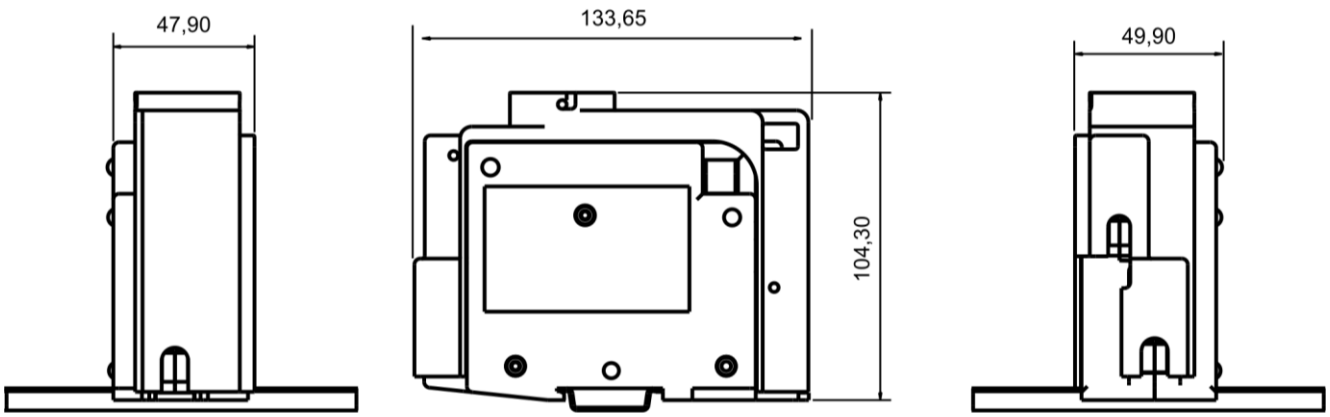

Figure 2 (Above) Dimensions of the Power-Rail meter <u>with</u> the shroud

Customer Interface Unit Dimensions

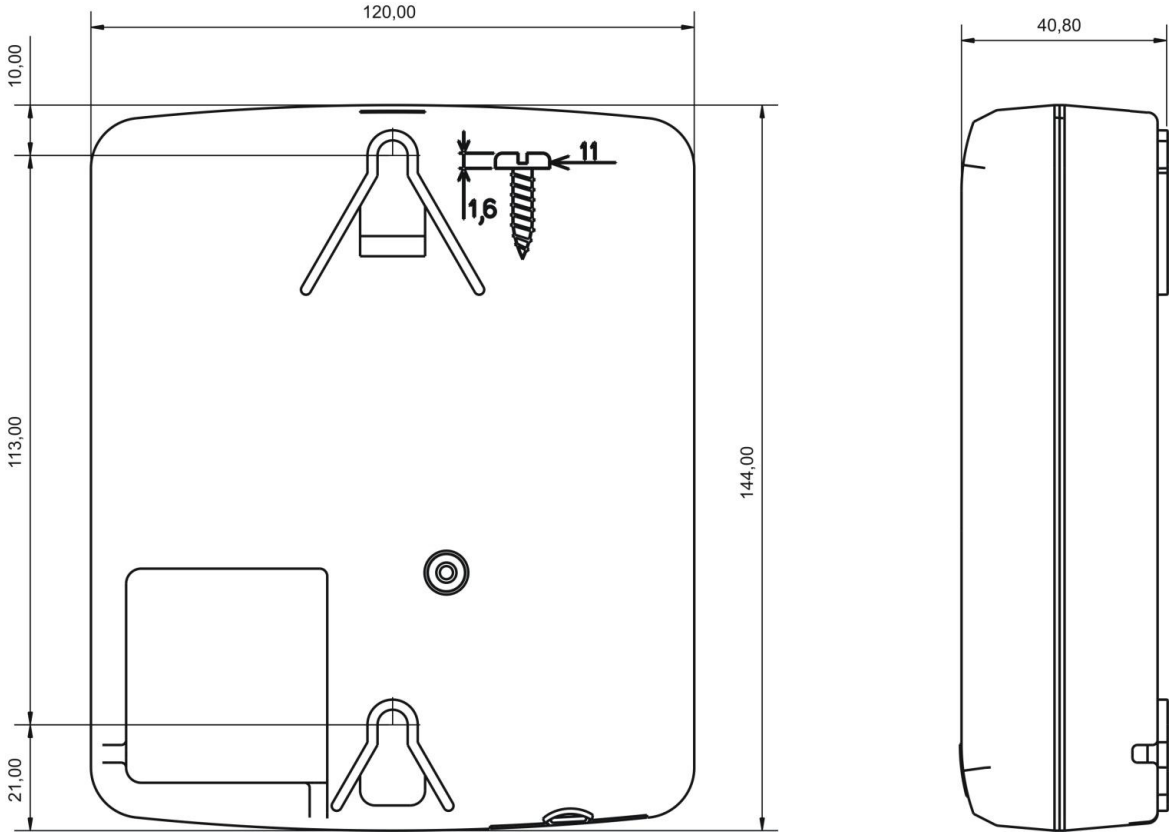

Landis+Gyr (Pty) Ltd
2 Slate Avenue, N1 Business Park
Old Johannesburg Road, Kosmosdal Ext. 7
Gauteng, South Africa
Tel: +12 645 3100
www.landisgyr.com/za

Landis+Gyr
manage energy better